LE481

LED BOOTH LIGHTING - FRONT ACCESS

Paint and Powder Booths ● Blast Booths ● Clean Rooms ● Prep ● Sanding

The LE481 Series is a hinged, **front access**, recessed mount, LED paint booth luminaire. The LE481 is made of a combination of 20 gauge cold rolled steel and .090 aluminum. This LED fixture is available in 4 Ft. lengths with 1, 2, or 3 rows of LED's; replacing your standard 2, 4, and 6 lamp fluorescent fixture. This fixture can be used with or without optics, has dimming capabilities, and is available with an EM option.

LE481		V1				
1	2	3	4	5	6	7

1 SERIES	2 SOURCE	3 VOLTAGE	4 OPTIC	5 DIMMING	6 CCT	7 OPTIONS
LE481	**58:** 58W / 1 Row **73:** 73W / 1 Row **115:** 115W / 2 Rows **145:** 145W / 2 Rows **172:** 172W / 3 Rows **218:** 218W / 3 Rows	**V1:** 120-277VAC (50/60Hz)	**Blank:** None **A:** Diffused Acrylic	**Blank:** None **D1:** 0-10V	**3:** 3,500K **4:** 4,000K **5:** 5,000K	**SP:** Surge Protector (430 joules) **EM:** Battery/Driver Backup (90min.)

CERTIFICATIONS

UL844 / CSA-C22.2 No.137 (Hazardous)
- CI D2, Grps A,B,C,D
- CII D2, Grps F,G
- Paint Spray Listed
- T Code: CI D2, CII D2=T5 (T6 w/ EM option)

UL1598 / CSA-C22.2 No.250 (Wet/Damp)
Lumen Maintenance (L70) > 54,000 hrs. (reported)
CRI >80
-30°C to 55°C Ambient

CONSTRUCTION

20 gauge white powder coated steel housing
Hinged, inside (front) access panel
Silicone free gaskets
4 Ft. length (nominal)
Clear tempered glass panel
Acrylic diffused lens (optional)
1/2" NPT Hub(s)
Weights: Min: 42lbs. / Max: 68lbs.

ELECTRICAL

120-277VAC
8Ft. 3-wire whip (standard)

FEATURES

0-10V Dimming
Recess mount - Front access
Withstands up to 71°C bake cycle for 90 minutes with fixture power interlock off
Emergency/Battery backup option available
Fits the same opening as Slim Light Series
5 year warranty

PERFORMANCE

Source	Voltage (VAC) 50/60Hz	Input Current (A)	Wattage (W)	CCT	Lumen Output* (Lm) No Lens	Lumen Output* (Lm) Diffused Lens
58 (1 Row)	120-277	.49-.22	58	3,500K	6780	5470
				4,000K	6990	5640
				5,000K	6990	5640
73 (1 Row)		.61-.28	73	3,500K	8440	6820
				4,000K	8700	7030
				5,000K	8700	7030
115 (2 Rows)		.97-.44	115	3,500K	13550	10940
				4,000K	13970	11280
				5,000K	13970	11280
145 (2 Rows)		1.22-.55	145	3,500K	16880	13630
				4,000K	17400	14050
				5,000K	17400	14050
172 (3 Rows)		1.45-.65	172	3,500K	20330	16410
				4,000K	20960	16920
				5,000K	20960	16920
218 (3 Rows)		1.84-.83	218	3,500K	25320	20440
				4,000K	26100	21080
				5,000K	26100	21080

*Nominal values

Emergency Lumen Output	
Diffused Lens	2150
No Lens	2470

LE481

LED BOOTH LIGHTING - FRONT ACCESS

Paint and Powder Booths ● Blast Booths ● Clean Rooms ● Prep ● Sanding

DIMENSIONS

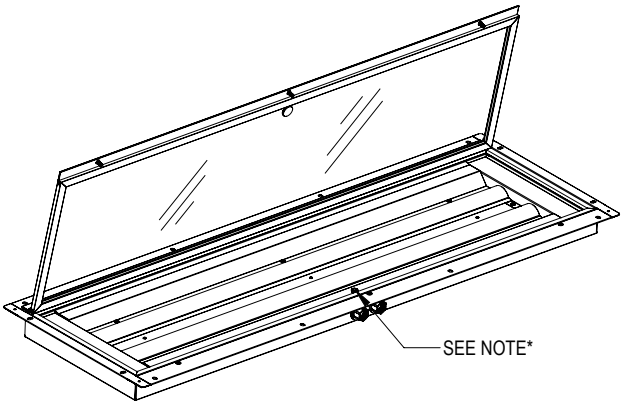

***NOTE**

Normally open magnetic switches are intended to be used to trigger a relay (furnished by others) which disables the paint system. Because of the small capacity of the switch a solid state relay is recommended. It may be desired by others to utilize a separate power supply to segregate the relay (furnished by others) from the lighting power supply. The magnetic switch IS NOT designed to directly control light operation! The magnetic switch is rated for 10 watts resistive at a maximum of 300 VAC.

CAUTION

Overloading the switch circuits WILL cause failure. LDPI, Inc. recommends having a certified electrician/engineer review loads to ensure that overloading of switch does not occur.

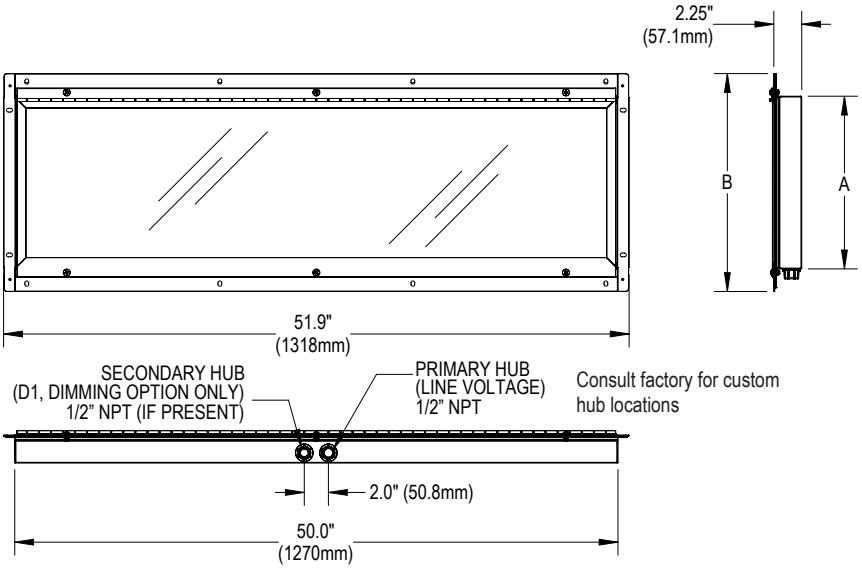

Source	Dimensions* (in./mm)	
	A	B
58 (1 Row)	9.5" / 241	13.0" / 330
73 (1 Row)		
115 (2 Rows)	14.50" / 368	18.0" / 457
145 (2 Rows)		
172 (3 Rows)	19.50" / 495	23.0" / 584
218 (3 Rows)		
	* Nominal dimensions	

PANEL CUTOUT DIMENSIONS

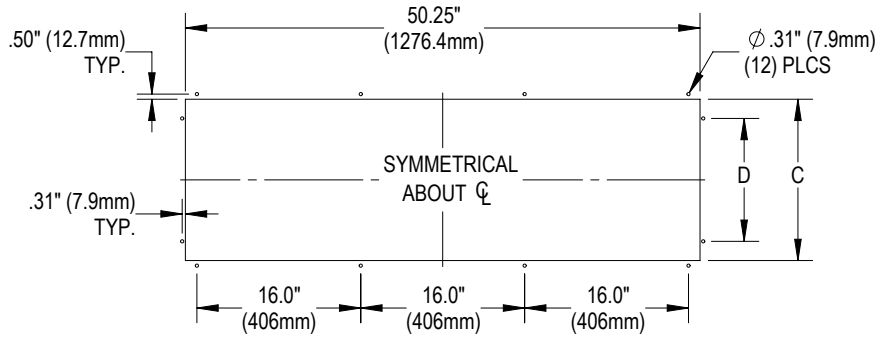

Source	Dimensions* (in./mm)	
	C	D
58 (1 Row)	10.75" / 273	7.0" / 178
73 (1 Row)		
115 (2 Rows)	15.75" / 400	12.0" / 305
145 (2 Rows)		
172 (3 Rows)	20.75" / 527	17.0" / 432
218 (3 Rows)		
	* Actual dimensions	